Contractor Report 271

Transport and Road Research Laboratory

Department of Transport

Geotechnical stress analysis: A possible approach for cantilever retaining walls on spread foundations

by M D Bolton
(University of Cambridge)

C

Crowthorne Berkshire RG11 6AU Tel. Crowthorne (STD 0344) 773131 Telex 848272 Fax 0344 770356

TRANSPORT AND ROAD RESEARCH LABORATORY
Department of Transport

Contractor Report 271

Geotechnical stress analysis: A possible approach for cantilever retaining walls on spread foundations

by M D Bolton
(University of Cambridge)

Paper to be distributed at Workshop on Limit State Design, TRRL, 25 September, 1991

The work reported herein was carried out under a contract placed on the University of Cambridge by the Transport and Road Research Laboratory. The research customer for this work is Bridges Engineering Division, DTp.

Structural Analysis Unit
Structures Group
Transport and Road Research Laboratory
Old Wokingham Road
Crowthorne, Berkshire RG11 6AU

1991

ISSN 0266-7045

CONTENTS

FOREWORD BY TRRL

This report describes the use of a limit state design method which has been developed to enable compatibility of design between superstructure and substructure. The method proposed is based on classical soil mechanics techniques and should find ready acceptance by geotechnical engineers. Although there are alternative approaches to limit state design, such as the use of probability methods, at the present time these have not found general acceptance by geotechnical engineers in the UK.

The objective of the Workshop is to present an opportunity for consideration and discussion of the proposed method. Although the report is restricted to reinforced concrete retaining walls on good foundations it is the intention to review the method in the light of other types of structure. This document should be read in conjunction with the accompanying technical report which provides details of the calculation procedure.

GEOTECHNICAL STRESS ANALYSIS : A POSSIBLE APPROACH FOR CANTILEVER RETAINING WALLS ON SPREAD FOUNDATIONS

by

M D Bolton

1 SCOPE

This document applies to reinforced concrete cantilever retaining walls, with spread foundations and forming bridge abutment sub structures with wing walls. A range of typical cross-sections is depicted in figure 1, and a typical wing-wall arrangement in figure 2.

This document is to be read in conjunction with the Code of Practice for Bridges BS5400 (1984) and the Department of Transport Specification for Road and Bridge Works (1987).

The objective of this document is to set out the criteria under which the safety and reliability of the structure must be assessed. Some criteria can be met only by adhering to particular rules, or by means of a specific calculation, references to which will appear in the report. Other criteria can be met in a number of ways, and the selection of the most appropriate demonstration is left to the designer. A separate report (Bolton 1991) providing details of methods of geotechnical stress analysis has been prepared to accompany this document. Other well-established methods of calculation may also be used, and a short bibliography is included herein.

All activities relevant to the design and construction of the facility must be carried out by, or under the close supervision of, chartered engineers who are skilled in the theory and execution of analogous works.

2 LIMIT STATE DESIGN METHOD

2.1 Definitions

Each structure will be required to satisfy certain performance requirements of stability, rigidity and durability during the period of its construction and its design life. Should a structure fail to satisfy one of these fundamental requirements it will be considered to have reached a limit state. The purpose of the document is to guide the designer through a sequence of decisions aimed at eliminating foreseeable limit states.

The variety of potential limit state events which threaten any structure is infinite. In order to balance the needs of safety and economy in design it is therefore necessary to reduce the consideration of limit state events to a relatively small number of trials of critical events. The minimum number of trials necessary for any particular class of structure is determined firstly by the number of independent modes of behaviour of the structure, and secondly by the diversity of situations which it will be asked to face.

For each class of structure the document will give details of the limit modes and the design situations which must be considered in assessing the suitability of a design. The limit modes will be representative of the modes of behaviour which are acknowledged to be capable of leading to an unsatisfactory performance of structures in the class under consideration. The specified design situations will be sufficiently hostile and of sufficient variety to safely encompass all the foreseeable conditions during the construction and use of the proposed structure.

Limit modes will be subdivided into collapse limit modes, concerned principally with safety, and serviceability limit modes concerned principally with loss of function or appearance.

Although the word "ultimate" is preferred to "collapse" in structural codes the deterioration of soil strength from peak to crictical state or, in some plastic clays, to residual, causes some confusion over the word "ultimate" in a geotechnical sense, and it is avoided here.

Design situations will be defined in terms of the critical loading incidents which have been selected for the purpose of design evaluation, and the soil condition which is to be assumed in the assessment.

2.2 Fundamental Requirements

2.2.1 Safety

The structure will be shown to be safe against collapse at critical stages during its construction and design life. Each critical trial will be based on the most unfavourable conditions which could reasonably be anticipated at that particular stage. The characteristics of the soil-structure system, and the external influences acting on it, must be considered in the most pessimistic terms consistent with overall credibility.

2.2.2 Serviceability

The structure will be shown to be serviceable in the sense that excessive deformations and cracks are avoided at certain critical stages during its construction and design life. "Excessive" deformations are those which seriously reduce working efficiency or which detract significantly from the appearance of the structure and which cannot economically be remedied.

It is the responsibility of the designer to assemble a complete list of performance requirements in terms of the actual displacement limitations, both of the structure as a whole and of sensitive components.

It may be cost-effective to permit reparable deformations to take place under certain exceptional conditions if the cost of prevention exceeds the possible costs of surveillance and repair. Design values for serviceability checks may be less severe than the worst credible values used in collapse checks. In such circumstances a contingency repair plan should be appended to the operation and maintenance manual for the structure. The reduced serviceability load factors of BS 5400 Part 2 will, however, be deemed to satisfy this requirement without further consideration.

2.3 Methods of Avoiding Limit States

Three methods are available for the avoidance of limit states.

(i) Evasive measures. In design, these include the selection of structural forms which are known not to be susceptible to a particular limit mode, or the provision of a particular facility - such as drainage - which eliminates important design uncertainties. In construction these include the provision of adequate guidance and inspection to ascertain that proper levels of workmanship are maintained and that particular hazards - for example the passage of heavy compaction plant too close to sensitive structures - are avoided. During operational life, evasive measures may include the instrumentation of structures or the control of vehicular access, for example.

This document makes reference to those evasive measures which are necessary, or which may be useful, in achieving safe and economic structures.

(ii) Calculated response. Here, the limit mode is avoided by a calculation which demonstrates that the state of the structure will remain within the specified limits.

(a) For collapse calculations two approaches are possible, based either on the specification of safe states which are known not to engender collapse in the mode concerned, or on an extensive search of collapse mechanisms which are known to be representative of those observed in the appropriate collapse mode. Safe states offer a lower bound to the true collapse load and will be validated by a comprehensive stress analysis which demonstrates that material strengths are nowhere exceeded. A solution by the analysis of failure mechanisms must usually be treated as inherently unsafe leading to an upper bound to the true collapse load, since the critical mechanism may not have been selected. A gross difference between the actual collapse mechanism and that used in the calculations may lead to

unacceptable errors on the unsafe side. A small difference between calculated and actual mechanisms will lead to a small error on the unsafe side. Such small errors may be mitigated by the use of slightly reduced material strengths in mechanism calculations compared with those used in safe state calculations. Such marginal reductions may be deduced by analogy with equivalent problems for which both upper and lower bounds are available, permitting a calibration.

(b) Serviceability calculations will generally have to take account of both "elastic" and "plastic" phases of system behaviour. A check on yield will always be a prerequisite to soil deformation calculations or to soil-structure interaction calculations based on stiffnesses.

Local plastic yielding may lead to a progressive deterioration of stiffness. Where this can be expected to occur at a given proportion of the collapse load, a modified collapse calculation could be used with an artificially reduced material yield strength. Likewise, a reduced soil strength could be selected at which soil strains could be taken to be acceptably small. In these circumstances the serviceability check will also demonstrate stability against collapse in the selected design situation.

This document does not contain details of calculation procedures. A suite of appropriate techniques may be found in the TRRL report Geotechnical Stress Analysis for Bridge Abutment Design, Bolton (1989), which has been compiled to accompany this document. Other methods of calculation may be used if compliance with this document's performance criteria can be demonstrated. A short bibliography is included in Section 6. It is intended that the TRRL report is to be updated or extended whenever necessary. References from this document to reports, books and papers are, accordingly, omitted. Engineers must satisfy themselves that their calculations are relevant in demonstrating compliance with one of the document's requirements.

This document requires that values of material properties and loads be pertinent to the actual limit state event under consideration. Guidance will be given on methods of selecting appropriate design values.

It will not be acceptable to estimate "nominal", "normal" or "working" values of material properties which do not relate to limit states, or to factor such nominal values to achieve "safe" values. The concept of "factor of safety" is not used in this document. Safety and serviceability are to be demonstrated by separate calculations which take a pessimistic but credible view both of the soil- structure system (and the material properties used to characterise its behaviour), and the loads and other actions which may influence it. The loading combinations and factors defined in BS5400 Part 2 will be adopted in this document as the basis for the rational assessment of actions.

(iii) Adaptive response. "Design-as-you-go" is an appropriate response where observations can economically be taken in the early stages of a project. Other adaptive responses will include the provision of a design feature or detail which will forestall certain limit modes provided that a regular programme of inspection is undertaken , so that any necessary maintenance can be carried out. Automatic alarm systems may alternatively be used where thay have been designed to fail safe.

In each case a strategy must exist for putting in hand some particular course of action when observations fall outside permitted bounds, and some savings must be demonstrated in comparison with avoidance methods (i) and (ii).

3 BRIDGE ABUTMENT DESIGN

3.1 Evaluation Procedure

Design evaluation consists of a sequence of critical trials. Each trial involves the specification of a limit mode and a design situation. Five independent limit modes are described which cover qualitatively the whole range of possible soil-structure behaviour. Design situations are specified by reference to three critical loading incidents, and to the soil conditions to be assumed around the structure for the purposes of the evaluation. Certain combinations of mode and situation are thought to be inherently impossible, incredible or redundant by virtue of being inevitably less critical than other combinations. Inessential trials will be indicated: all other critical events must be accounted for.

3.2 Limit Modes

Five limit modes must be considered, designated 1 to 5 below. In each mode, there may be a family of related mechanisms which must be forestalled in each of the specified design situations.

Mode 1: Unserviceability arising through soil strain

The magnitudes of soil strain are such as to cause unserviceability of the structure. Unserviceability due to strains in the natural soil substratum may take the form of loss of headroom under the deck, loss of clearance in joints and bearings, disruption of drains, or unfavourable load distributions between bridge supports. Examples are shown in figure 3.

Compaction of the backfill due to live loads in service may additionally lead to a step developing behind the abutment wall as indicated in figure 4. Although such defects can be temporarily repaired, the life cost of maintenance generally exceeds the cost of prevention through the adequate compaction of backfill during construction.

The designer must generate a list of performance criteria in terms of the actual deflection requirements of specified components. The permissible magnitudes of the various deflections arising from soil deformation should be selected by the designer so as to take into account inevitable additional deflections consequent on structural deformation. Where deflections threaten to be significant it will be necessary either to specify unusually compliant components (eg bridge bearings), or to stiffen the abutment foundations, or both.

Calculated deflections may exceed permissible limits only where reliable means of readjustment such as jacking points can be economically provided, following the principles of section 2.2.2.

Mode 2: Unserviceability arising through concrete deformation.

The reinforced concrete structure develops excessive internal deformations arising from the combined actions of any bridge loads and soil stresses acting upon it. Excessive deformations are those detailed in BS 5400 Part 4, relating to contraventions of crack width criteria in Section 4.1.1.1, and stress limitations in concrete and steel as detailed in Section 4.1.1.3 and Table 2. Since structural unserviceability can arise due to stress concentrations following

differential settlement, or pre-compression of the backfill due to compaction or previous loading, and since such stress distributions would no longer apply at collapse, it will always be necessary to apply these serviceability stress limitations.

Mode 3: Collapse arising through soil failure.

Active failure of the backfill coupled either with sliding failure of the base or the failure of the natural soil substratum, permits an incalculably large movement of the otherwise undamaged wall, acting as a monolith. Examples are shown in figure 5.

Mode 4: Collapse involving both soil and concrete failure.

The reinforced concrete structure is ruptured whether due to excessive tension, compression, shear or moment arising from the combined actions of any bridge loads and soil stresses acting upon it. Examples are shown in figure 6.

Mode 5: Collapse arising without soil failure

Structural components fail, without previous signs of distress, through brittleness or lack of continuity and without mobilizing the full strength of neighbouring soil bodies. For example:

The bridge deck collapses due to the outward deflection of the bridge support exceeding the projection of the deck, while the support is far from mobilizing the ultimate bearing capacity of the foundation soils.

Brittle shear failure of the reinforced concrete base occurs as shown in figure 6(d), due to the omission of steel stirrups: neighbouring soil bodies could not be assumed to be at failure at the instant of collapse, and the structure could be vulnerable to stress concentrations.

Mode 5 can be avoided by evasive measures which ensure ductility of members and continuity of support. Collapse must then be preceded by an unserviceable condition which will have been checked under Modes 1 or 2. The soil strains which could excite Limit Modes 1 and 5 would, in principle, be calculated in the same fashion. The displacement required to cause unserviceability will clearly be smaller than that required to cause collapse. Furthermore, the dominant strain effect will generally be due to consolidation of any compressible soils under the self-weight of the fill so that the possible variation of imposed actions between Mode 1 and Mode 5 calculations would also be very small.

It follows that an independent consideration of Limit Mode 5 is not generally necessary. It should be noted, however that a rigorous analysis of Mode 1 events will be required if unserviceability is to be prevented from escalating towards collapse. Two examples follow.

(i) A bridge deck may be designed to resist large differential settlements: the distortion may ultimately become so large that the deck threatens to fall between the supports. It is essential to monitor the performance of bridges which have been designed to withstand severe subsidence effects. Such designs must be considered to be forestalling limit states by a combination of evasive measures such as a deck of low torsional stiffness, with an adaptive response such as a mandatory

programme of inspection and maintenance.

(ii) A structure in a zone of intermittent seismic activity may be designed solely to resist static actions: an earthquake may cause a sufficiently large amplitude of dynamic displacements to permit the deck to fall between the supports. A dynamic soil-structure analysis must be undertaken whenever bridgeworks are to be designed against an acknowledged seismic risk. In this respect the anticipated accelerations of the bed rock, and their possible dynamic amplification in the structure due to resonance either of the intervening soil strata or of the structure itself, are of prime concern. The possible duration and orientation of shaking should also be considered.

3.3 Design Situations

3.3.1 Loading incidents

The following loading incidents represent extreme but artificial combinations of loads which are expected to encompass all conditions of potential failure during the construction and life of the proposed structure. If the designer has evidence that a more severe combination of loads is a realistic possibility, this combination must be included as an additional loading incident.

Load combinations 1-5 are those referred to in BS 5400 Part 2 Section 4.4. They are to be used in conjunction with the load factors listed in Table 1 of that section, except as follows. Soil contact stresses shall not be considered to be permanent as defined in BS 5400 Part 2, Section 4.3 and shall be excluded from the combinations defined in Section 4.4 thereof. Soil stresses shall be calculated separately, case by case, according to the principles set out herein, and shall not be factored.

Three loading incidents must be considered.

Incident C: Construction nearing completion

The backfill to the structure is in place. The maximum likely superimposed load, whether consisting of the paving machine and the higher elevation pavement or of the machine used to compact the backfill, or of some other superimposed load, will be considered to act in whatever location maximises the hazard.

The following deck loads are to be investigated to find the worst case;

(i) deck not present

(ii) load combination 2 comprising deck loads and erection loads.

Incident P: Structure working under maximum primary loading

Superimposed loads on the elevated carriageway as it approaches the abutment shall represent the primary live load as defined in BS5400 Part 2, sited for maximum hazard.

The following deck loads are to be investigated to find the worst case;

(i) dead loads and superimposed dead loads

(ii) dead loads, superimposed dead loads and primary live loads: load combination 1.

Incident L: Structure working during a longitudinal loading incident

The following load cases must be shown to be acceptable, in which longitudinal deck loads act to force out the abutment:

(i) dead load, superimposed dead load and temperature restraint: load combination 3.

(ii) dead load, superimposed dead load and secondary live braking load together with the appropriate associated primary live load: load combination 4.

(iii) dead load, superimposed dead load and friction at the bearings: load combination 5.

In each case the superimposed loads on the elevated carriageway as it approaches the abutment shall represent the primary live load, sited for maximum hazard. Where HB loading is taken on the deck, then no more than HA loading shall be assumed on the approaches and vice versa. The effect of braking an HB vehicle can be assumed to be greatest at any abutment providing deck fixity, when one bogie is on the deck while the other surcharges the backfill behind the wall: the entire horizontal force due to the vehicle can be taken to be applied to the abutment at the elevation of the deck connection.

3.3.2 Soil conditions to be assumed during a loading incident

Two soil conditions are to be used for the evaluation of limit events, representing maximum and minimum base support. The appropriate condition to be invoked in a particular case will depend both on the limit mode under investigation and on the type of loading incident to be applied.

Condition R (removal of support at the base, active pressure in the fill). This involves minimum base support preventing active wall movement. Soil overburden lying above the level of the foundation interface, and therefore capable of enhancing bearing capacity, will be ignored if its removal at critical stages (by river erosion, or through future construction activity, for example) can not be discounted. Where the abutment separates carriageways at two elevations, the lower carriageway pavement will be assumed not to be present and a narrow service trench will be invoked in front of the base eliminating passive support.

Active earth pressures, modified by current superimposed loads, will be taken to act in the backfill.

Condition S (support at the base, enhanced lateral pressures in the fill). The base is to be taken to be supported with the greatest credible stiffness. For this purpose, the lower level carriageway will be taken to be present , and resistance is to be invoked in front of the base.

Enhanced lateral stresses will be taken to be locked-in to the backfill due to the initial compaction process or to the later application of superimposed loads. Additional lateral stresses may also be generated by current superimposed loads.

Condition R is to be selected when the failure mode would be suppressed by the presence of extra base support. This is always the case with limit modes 1,3,4 and 5.

Condition S is to be selected when the failure mode would be aggravated by the presence of extra base support. This is generally the case with limit mode 2 when locked-in lateral pressures (eg due to compaction) in the backfill could be relieved by base movement, thereby reducing the load effects in a structural serviceability calculation.

Parameters describing the strength and stiffness of the soil, and the location of the groundwater, are to be selected to be as unfavourable as they could reasonably in be in the circumstances: guidance is given in section 4.

3.4 Trial of Critical Events

Table 1 displays the factors governing the critical events to be forestalled by calculation. Events 9, 10 and 12 are not critical since they are inherently less demanding then other events in the list. In addition to the required calculations, it will also be necessary to demonstrate that Mode 5 failures will be avoided through evasive measures taken together with the avoidance of Modes 1 and 2.

Table 1: Limit Events

Event number	Limit mode	Soil condition	Loading incident	Design Variable
1	1	R	C	foundation outline
2	1	R	P	
3	1	R	L	
4	2	S	C	concrete sections
5	2	S	P	
6	2	R	L	
7 Δ	3	R	C	foundation outline
8 Δ	3	R	P	
9 *	3	R	L	
10 *	4	R	C	concrete sections
11 Σ	4	R	P	
12 Σ	4	R	L	

* Not critical: no need for separate consideration.
Δ It will, in principle, be possible to conduct such complete serviceability checks under events 1 & 2 that collapse is automatically prevented. Check that soil strength reduction factor more than compensates for enhanced load factor.
Σ Having completed stress limitation checks under events 5 & 6, check now for shear only.

For every limit event, a free body diagram must be constructed which demonstrates that the complete structure is in equilibrium under the action of stresses generated in the backfill, loads transmitted through the deck, and bearing pressures created around the foundations. Depending on the limit mode being checked, the output of the free body diagram may be a demonstration that bearing stresses and associated soil strains, or structural load effects and consequential structural deformations, are admissible. The particular conditions and objectives relating to each limit event are set out below.

Limit Event 1: (Mode 1, Condition R, Incident C)

Construction loads must not cause bearing stresses to exceed their serviceability limit, after which substantial zones of yielding would occur beneath the foundation. Both drained and undrained foundation conditions will be checked, if relevant.

Additional lateral stresses due to compaction need not be included since relatively small wall translations would relieve them. Soil strains need not be estimated at this stage because they will be exceeded in service if yield is substantially prevented during construction.

Limit Event 2: (Mode 1, Condition R, Incident P)

Maximum primary loads must not cause bearing stresses to exceed their serviceability limit. Soil deformations are then to be calculated and shown to be acceptable in relation to performance requirements.

Checks of bearing stresses will cover both undrained and drained foundation conditions, if relevant. Permanent deformations, due to the combination of dead and superimposed dead load on the deck and the self-weight of the wall and backfill, are to be based on the fully drained soil stiffness. Temporary deformations due to primary live loads on the deck and the elevated carriageway may be based on the undrained stiffness of soils provided it can be shown that the period required for 50% pore pressure dissipation will exceed 1 day. Otherwise, the fully drained stiffness shall be used.

In cases where the settlement of loose granular soils is difficult to estimate, pre-compaction or stabilization may be preferred.

It may be presumed that negligible permanent deformations will occur in granular soils whose relative density exceeds 50%, which are never required to mobilize an angle of shearing resistance more than 30°, and in which the amplitude of cyclic changes of shearing angle does not exceed 5°.

Limit Event 3: (Mode 1, Condition R, Incident L)

Longitudinal loads must not cause bearing stresses to exceed their serviceability limit, checking both drained and undrained foundation conditions, if relevant.

Limit Event 4: (Mode 2, Condition S, Incident C)

Construction load effects in the structure will be derived, and then checked for serviceability in accordance with BS5400 Part 4.

The lateral stress distribution in the backfill will not be inferior to

(i) the largest compaction-induced stresses which could reasonably be expected to occur, account being taken of any weight limits to be imposed on contractors' plant.
(ii) stresses due to self weight and superimposed loads based on an at-rest earth pressure coefficient $K_o = 1 - \sin\varphi'_{max}$, which may be reduced to an active coefficient $K_a = (1 - \sin\varphi'_{mob})/(1 + \sin\varphi'_{mob})$ based on a mobilizeable soil strain in the case of walls designed to be correspondingly flexible; where φ'_{max} or φ'_{mob} are taken at their lowest credible value bearing in mind the projected control over compaction.

Where the loads may take alternative routes through the structure (eg where a shear key is used in conjunction with friction on the remainder of the base) components on each load path will be designed to accept the greatest credible proportion of the total load. This will, in general, mean designing each component separately on the assumption that its relative stiffness is as large as may be reasonable.

In each case, an equilibrium free body diagram will be constructed, employing appropriate soil stress distributions on all surfaces contacting the structure, and accounting for deck loads.

Limit Event 5: (Mode 2, Condition S, Incident P)

The calculations of Limit Event 4 will be extended to cover the possibility that lateral stresses may have been increased due to current superimposed loads, and accounting for updated deck loads.

Limit Event 6: (Mode 2, Condition R, Incident L)

The calculations of Limit Event 4 will be modified for longitudinal loading, forcing out the abutment.

The lateral stresses in the backfill will be calculated using active pressures supplemented for current superimposed loads only. This takes account of the degree of wall movement necessary to produce distress being at least as large as that required to erase locked-in lateral pressures.

Limit Event 7: (Mode 3, Condition R, Incident C)

Construction loads must not cause the collapse of the structure as a monolith.

Worst credible values will be assumed for soil strengths, appropriate to the period of construction and commissioning, and checking both undrained and drained strength if appropriate.

Limit Event 8: (Mode 3, Condition R, Incident P)

The calculations of Limit Event 7 will be modified in respect of
-loads being maximum primary
-soil strengths being updated to be the worst credible values post-construction.

If it can be demonstrated that a degree of consolidation can reliably be anticipated during construction, a conservative estimate of the consolidated - undrained strength shall be made.

Limit Event 9: (Mode 3, Condition R, Incident L)

Monolithic collapse due to longitudinal loading: non critical since subsumed under Limit Event 3.

Limit Event 10: (Mode 4, Condition R, Incident C)

Construction loads must not cause the structure to rupture: non-critical since subsumed under Limit Event 4, while subject to continuous inspection during construction.

Limit Event 11: (Mode 4, Condition R, Incident P)

Maximum primary loads must cause no member to rupture. Having checked Limit Event 5 against service stress limitations, it is necessary only to check for shear.

Stresses in soil adjacent to a ruptured member shall be in accordance with worst credible values of soil strength.

Limit Event 12: (Mode 4, Condition R, Incident L)

Structural rupture due to longitudinal loading. Having checked Limit Event 6 against service stress limitations, it is necessary only to check for shear.

Stresses in soil adjacent to a ruptured member shall be in accordance with worst credible values of soil strength.

3.5 Additional Findings

Additional findings of research, technology or field observation should be incorporated in the engineer's design considerations, as follows:.

(i) A design situation which was unforseen or which was thought to be unrealistic, and which has been observed to lead to limit states in circumstances more severe than had previously been allowed for, should be added to the list of critical design situations.

(ii) A limit mode which was unforseen, and which may be presumed to be more critical than the previously considered modes, should be added to the list of critical limit modes.

(iii) The publication of any new analytical methods and the availability of any new technologies or instruments should be taken into account within the overall strategy laid down in the document. In particular, where the published back-analysis of some limit state event leads to the conviction that a previously accepted method of calculation is in error on the unsafe side, an alternative method of calculation should be sought, or some allowance made.

4 DESIGN CONSIDERATIONS

4.1 Actions Which May Induce Limit Modes

The following actions need to be considered:

vertical stresses applied to the natural ground by virtue of the weight of the embankment backfill and structure.

loads applied to the abutment in service through the deck connection or bearing, derived from BS 5400 Part 2.

superimposed loads applied on the highway in service, spreading through the pavement to act on the backfill, calculated in accordance with BS 5400 Part 2.

lateral stresses exerted by the backfill on the abutment wall including those increments due to compaction of the retained fill and to temperature fluctuations in service.

removal for maintenance of soil or carriageway construction from in front of the abutment's foundation .

groundwater pressures, both in the natural ground and the backfill, allowing for the provision and reliability of extra drainage facilities.

subsidence waves, such as may be caused by long wall mining beneath the site.

seismic effects, where earthquakes might be anticipated.

4.2 Superimposed Highway Loading

4.2.1 Nominal HA loading

BS 5400 Part 2 section 6.1.2 defines the number and width of notional traffic lanes as a function of the total carriageway width between raised kerbs. The outcome is a notional lane width W of between 2.3m and 3.8m. The uniformly distributed component of HA loading is then defined as 30 kN/m of notional lane. This leads to an applied pressure on the paved surface of

$$\sigma_s = 30/W \text{ kN/m}^2$$

A knife edge load of 120 kN/notional lane is also to be considered to act. This line load of intensity

$$S = 120/W \text{ kN/m}$$

will be considered to act parallel to the back face of the abutment wall.

These loads must be situated on the carriageway behind the abutment so as to create maximum hazard in the particular case being considered. Figure 7 shows two sets of locations which usually maximise the danger of

a) soil deformation (Limit Modes 1 and 3)

(b) structural deformation (Limit Modes 2 and 4).

In (a) the rectangle of fill above the base is left unloaded so as to mobilize the maximum angle of shearing δ on the base and to emphasise the settlement of the fill relative to the foundation. In (b) the carriageway loads are brought as close as possible to the wall stem to maximise the induced lateral thrusts and moments. Depending on the conditions the critical soil deformations in Mode 1 might be due to settlement of the wall base relative to the neighbouring fill: in this case figure 7(b) should be taken to apply.

In addition, corresponding superimposed loads on the bridge deck itself should either be minimised or maximised according to whether their effects on the abutment are beneficial or not.

4.2.2 Nominal HB loading

The critical component of HB loading for the retained soil will consist of a pair of axles at 1.8m spacing, each carrying 4 wheels spaced at 1m centres which are nominally loaded to 2.5kN per wheel per unit of HB loading. For the purposes of this document this loading will be represented by a uniformly distributed load of 20kN per unit of HB loading acting on a rectangular area of B = 2m (along the carriageway) by C = 3.5m (transverse to the carriageway). The stress applied to the paved surface by 45 units of HB loading is then 129 kN/m^2. Spreading at 1:1 through a concrete pavement, or 1:2 through asphalt, the same load will be considered to act over an increased area (B' x C') of subgrade, and the pressure will correspondingly reduce to a value not normally in excess of 90 kN/m^2.

The effect of this distributed load can be calculated on the basis that excess lateral pressures occur on the abutment wall in a vertical strip of width C'. Plane strain calculations can then be applied, with a line load of magnitude 20/C' kN/m per unit of HB loading acting uniformly over a strip of width B' placed at some appropriate separation from the wall. Figure 8 shows the disposition of the loaded area which usually maximises the hazard (a) to soil deformations (Limit Modes 1 and 3) and (b) to structural deformations (Limit Modes 2 and 4). In each case, the other pair of axles of the HB vehicle may either be on the bridge deck close to the abutment or on the retained soil beyond the first pair (in which case their effect might be negligible). As in 4.2.1, the critical disposition of loads with regard to soil settlements must be carefully assessed.

The maximum thrust in the wall stem may, however, occur when the entire HB vehicle is on the deck close to the abutment. Careful consideration must be given, in any particular structural calculation, to the most hazardous location for the HB vehicle.

4.2.3 Load application and load factors

BS 5400 Part 2 Section 6.4 defines the overall loading to be used on the various lanes of the carriageway in terms of the nominal HA and HB load patterns. Design checks must be made both with HA loading in isolation and with a specified combination of HA and HB loading. In essence, where HA loading is considered in isolation it should be applied over 2 notional lanes with 0.6 of HA loading over all other notional lanes. Where HB and HA loading are considered in combination, section 6.4.2.2 details the

loading geometry of the HA loading which must be assumed to surround the HB vehicle.

BS 5400 Part 2 additionally requires that a variety of load factors be used on the nominal loading combination. The values depend on the nature of the design situation and the type of limit state being considered; they are summarised in table 1 of that code.

4.3 Reinforced Concrete

The specification of structural materials and performance shall be in accordance with BS 5400 Part 4, Code of practice for design of concrete bridges. Equilibrium free-body diagrams for the reinforced concrete structure as a whole will be derived from soil stress analyses pertaining to each of the designated critical events. Wall stems and bases will then be proportioned and reinforced as slabs according to that code. Load effects calculated for limit modes 1 and 2 will satisfy serviceability limit state values listed in Section 4.1.1 and Tables 1 and 2. For the purpose of calculating design crack width according to Section 5.8.8.2 it may be assumed that the live load component of lateral earth pressure is negligible, while vertical stress changes due to superimposed live loads will be calculable. Load effects for limit modes 3,4 and 5 will satisfy ultimate limit state values indicated in Section 4.1.2.

Particular attention must be given to steel detailing which will ensure the efficient transmission of bending moment and shear force through the junction between stem and base. Longitudinal steel from the retaining face of the stem and the heel should form intersecting loops within the junction. Efficiency is improved by the additional provision of diagonal bars to reinforce the inside corner, and further improved if the concrete can also be splayed in the corner.

4.4 Natural Ground

4.4.1 Site investigation and testing.

Site investigation should be in accordance with BS5930, and methods of testing should usually comply with BS1377. Where non-standard techniques are employed their use should be fully explained. The engineer reponsible for interpreting the soil data and selecting design values should be present when samples are taken or tests conducted in the field, and shall be familiar with all the testing methods to be employed.

Boreholes and pits will be used to furnish information regarding the nature, consistency, and disposition of soil and rock strata, sufficient to carry through a safe and economical design . In particular the possible existence and extent of significantly compressible or weak strata, or of any plastic clays, will be investigated. Undisturbed samples of fine-grained soils will usually be required for laboratory testing leading to strength and stiffness determinations. Self-boring pressuremeter tests may serve the same function in a wide range of soils. Penetrometer tests (SPT, CPT etc), will usually be used empirically to furnish equivalent information, especially in coarse grained soils, when used in conjunction with a soil classification derived from disturbed samples. In deriving a ground profile for design, it will be necessary to put the worst credible interpretation on the soil data.

No design values will be taken which are more favourable at any position to data which have been recorded at that position, unless one of the following conditions has been met.

(i) The inferior data can be proved to be inaccurate or irrelevant, beyond reasonable doubt.

(ii) There exists a fall-back strategy which permits a safe and economic remedy in the event that the more pessimistic interpretation were correct.

This will usually mean that the weaker soil layers are taken to be at least as thick as their maximum recorded thickness, and to be no stronger or stiffer than their minimum recorded values, when data in the immediate vicinity of the proposed structure is being amalgamated. A more optimistic view may be taken of superficial deposits, however, if an inspection during construction can be relied upon: material found to be inferior can then be removed and replaced.

An exception to the general requirement to underestimate soil competence arises in the calculation of differential settlement. In this case the differences in soil stiffness beneath two points on the structure should be taken to be as large as a reasonable interpretation of the data will allow. This may mean that the soil beneath one point is taken to be as stiff as seems reasonable while the soil beneath the other point is taken to be as compressible as seems reasonable.

The existing groundwater regime will be determined. Sufficient piezometer or bore-hole locations will be used to establish the existence of any perched water tables or artesian conditions. An extrapolation will then be made for the harshest conceivable conditions, allowing for seasonal variations, the possibility of flooding, and the possible accidental release of water from mains or sewers. In situ permeability tests may be required.

A chemical analysis of the groundwater will be conducted to determine the sulphate ion concentration and pH level. Further chemical or biological tests will be conducted whenever necessary, to determine the susceptibility to degradation of the materials of construction, including any naturally occuring soil and rock materials, during the design life of the structure.

4.4.2 Clays and silty clays.

The information most relevant to the possible collapse of a structure during construction, and in the period prior to the completion of consolidation, will be the undrained strength c_u. A profile of the natural water content in relation to the Atterberg limits should be obtained so that strength determinations can properly be extrapolated. In the event that impermeable clays supporting the proposed spread foundation are found to possess $c_u/\gamma H < 0.3$ where γ is the unit weight and H the height of the proposed backfill, some measure of soil drainage, stabilization or piling may have to be considered. The possibility of subsequent differential settlement will probably mean that such alternatives as rock columns or piles will be required to reduce overall settlements. Clays of intermediate relative strength $0.3 < c_u/\gamma H < 0.6$ are likely to offer serious stability problems until excess pore water pressures have dissipated. Information regarding the rate of transient drainage of the

clay strata would be required if it was intended to take account of the gain of strength due to consolidation between loading phases. With clays of higher relative strengths, $c_u/\gamma H > 0.6$, the foundation design is more likely to be determined by drained rather than undrained behaviour.

The soil parameter most relevant to collapse considerations in service, and after equilibration of pore water pressures, will be the soil's critical state angle of shearing with respect to effective stresses φ'_{crit}. This can be estimated, for example, as the peak angle of shearing mobilised in a triaxial compression test on a clay sample consolidated so as to exceed its previous precompression and then permitted to swell to an overconsolidation ratio of 2 prior to shear testing. Such a test can also offer information on the recompression characteristics and overconsolidation ratio of the soil in-situ which would also be useful in serviceability considerations. The use of critical state strengths is consistent with the philosophy adopted here of assuming the most unfavourable conditions at collapse. The effects of possible swelling, softening and progressive failure are thereby accounted for.

Separate calculations will generally have to be performed against the possibility, in any design situation, that relatively impermeable soils might shear in either an undrained or drained fashion. An exception would be where a pessimistic bound can be put on the degree of transient drainage in a particular situation. In the case of stiff clays under light stresses the soil will progressively swell and weaken, so the estimated degree of transient drainage must err on the high side. In the case of soft clays under large stresses the soil will progressively consolidate and strengthen, so the estimated degree of transient drainage must err on the low side. The duration of transient drainage is inversely proportional both to the coefficient of permeability of the soil and to its stiffness. The relevant permeability is difficult to measure accurately other than by an in-situ test. Due to the effects of varying effective stress-level, and of soil disturbance, errors of upto a factor of 10 are not uncommon unless a pumping test was carried out with an array of observation piezometers. Laboratory permeabilty or oedometer tests on samples recovered from the field are even less likely to give accurate permeabilities, since the structure of fissures and the continuity of permeable laminae are likely to have been disrupted.

The stiffness of soil is also highly non-linear. The lowest stiffness occurs in the plastic compression of normally consolidated clays at overconsolidation ratios (OCR) of unity, when the tangent modulus is roughly proportional to the effective stress level. On rebound or recompression (OCR > 1) the tangent stiffness is largest immediately after a reversal in the direction of straining, and reduces as straining continues, but is rarely less than five times stiffer than normally consolidated soil under the same stress increment. Particular caution must therefore be exercised if transient drainage, or the lack of it, is to be relied upon since the coefficient of consolidation is proportional to stiffness.

The information most relevant to serviceability failures is the effective stress history, and especially the effective precompression of any clayey strata which are to be significantly loaded. Significant plastic yielding of foundations on clay is avoidable if two conditions are met. Firstly, the load factor against undrained collapse should exceed 2 if significant local yielding beneath the edges of the foundation is to be avoided. This condition can be met by using no more than one half of the soil's undrained shear strength in a plastic collapse calculation. Secondly, the

effective bearing pressures after consolidation should not exceed the effective precompression of the soil. These two conditions relieve the designer from the onerous task of calculating plastic strains in demonstrating serviceability.

The appropriate soil stiffness may be determined either from consolidated undrained or drained triaxial tests, or from oedometer tests. In either case two loading/unloading cycles should be carried out between the relevant limits of effective vertical stress. Where soils will remain overconsolidated under field loading, the higher stiffness measured in a sample on the second loading cycle may be used to estimate quasi-elastic soil displacements. Field tests, such as with the self-boring pressuremeter, can give more reliable results, especially where soil disturbance during sampling would otherwise disguise the soil's in-situ stress history.

Limiting displacements of foundations are typically considered to be of the order of 1% to 2% of the width of the base. It follows that the compressive strain in the most significant soil zone, whose depth equals the width of the footing, must not generally exceed 1%, to assure serviceability. The soil strength mobilised at 1% strain on an appropriate stress cycle may therefore serve as an approximate maximum for serviceability calculations. Such a mobilizeable strength value could be used in plastic-strength type calculations, as a means of obtaining an initial design geometry.

In addition to controlling the soil deformations beneath the retaining wall due to its own bearing stresses, the structure must also be designed to tolerate the differential consolidation settlement of the heel relative to the toe, which is induced by the overburden of the embankment, especially over deep strata of compressible clays. This differential consolidation will tend to cause an inward base rotation, opposing the tendency for outward rotation due to lateral earth pressure on the abutment wall. It will be necessary to estimate the long-term rotation of the base, and to demonstrate that this will cause neither excessive earth pressures to be induced on the stem due to inward rotation, nor the deck to jam against the abutment due to outward rotation.

4.4.3 Silts and sands.

The critical state angle of shearing of sands and silts may be obtained from the plateau of post-peak strength ultimately mobilized in drained triaxial compression tests on saturated loose, remoulded samples, or similarly in direct shear tests, for example. No part of the dilatant peak in the strength of granular soils should be employed in collapse calculations unless <u>each</u> of the following conditions is met:

(i) Sufficient site testing, eg by SPT or CPT, has been carried out to establish a safe lower bound.

(ii) A correction has been applied to account for reduced dilation and angle of shearing at increased stress levels.

(iii) There is no possibility of future soil disturbance, such as by mining subsidence for example, leading to dilation and softening.

(iv) There is sufficient evidence that progressive failure would not lead to lower strengths being attained.

Values of soil stiffness required for serviceability calculations of foundations will usually be derived from empirical correlations with penetrometer data. In situ loading tests such as plate bearing or the screw-plate test may be used to achieve a more accurate assessment of stiffness.

As with clays, the strength mobilizeable at 1% strain may offer a suitable limiting value in serviceability calculations for foundations. Plastic-type calculations based on $\varphi'_{1\%}$, from which mobilizeable active and passive earth pressure coefficients or bearing capacity coefficients could be derived, may then replace elastic-type calculations based on stiffness. In the absence of specific data it may be taken that $\varphi'_{1\%} = (\varphi'_{max} - 7°)$ for granular soils under light confining pressures which are not subject to particle crushing.

Where the presence of loose sands or silts is established, the use of prior surcharging, or of deep compaction techniques, or the insertion of stone columns, should be considered as an alternative to determining the possible settlements of the untreated soil.

4.4.4 Rocks.

Sufficient exposures will be opened to permit the determination of the stability of permanent and temporary works associated with the construction. The orientations of bedding and dominant joints will be determined where significant excavations are involved. Angles of friction of representative weathered and unweathered surfaces and gouges will be determined. Samples will be exposed to weathering trials where rocks are to be used as fills.

4.4.5 Alternative methods.

Poor foundation conditions should predispose the designer to the use of articulated bulkheads which permit differential settlements and rotations. Multi-anchor or reinforced-earth systems should therefore be considered as an alternative.

4.5 Soil Backfill

The specification and compaction of the structural backfill will conform to the requirements for granular fill to structures published in the Department of Transport Specification for Road and Bridge Works.

The angle of shearing resistance used in collapse calculations shall not exceed the critical state value. This may be presumed in design to be 32° prior to a confirmation during placement that the selected material ultimately mobilizes no less than this. There is evidence that rupture bands develop from the heel of an L-wall when the wall is permitted or forced to slide forward. These rupture bands are the seat of large localised shear strains which lead therein to relatively sudden softening to critical states of the previously compacted material. For this reason it is considered to be unsafe to assume that the backfill can mobilize any strength greater than the critical state.

Backfill selected and placed according to Specification may be assumed to be subsequently incompressible under all but the most severe cyclic loading. However, cyclic loads which mobilize moderate angles of shearing are likely to cause progressive compaction of the fill which may approach the maximum achievable in the standard compaction test, described in BS 1377(1975). If corresponding settlements are to be avoided, either the degree of initial compaction must be increased or the magnitude of the cyclic stress effect reduced, possibly through the use of a deeper cemented or bound zone immediately beneath the plane of application of the load.

The effective weight of any construction plant to be permitted on the fill must be included in the appropriate collapse assessment. Possible serviceability problems arising during construction from the lateral prestressing effect of construction plant will also have to be taken into account. Such pre-stressing can be taken to protect the wall against the effects on serviceability of superimposed loads inferior to construction loads. The specification of compaction of the backfill, including the possible exclusion of certain weights or types of machine, must take account of both the beneficial and harmful effects of heavy compaction.

Superimposed loads causing stresses which exceed the previous maximum will generally cause further plastic strains in the backfill causing additional wall displacements. If the structure can tolerate earth pressure coefficients $K_o = 1 - \sin\varphi'_{max}$ acting with the vertical stresses caused by these new loads, damage will be limited to a small amount of compaction settlement in the fill. The appropriate value of K_o will be that of a soil element in its loosest conceivable state, taking the projected degree of compaction control into account. Flexible walls may be designed to remain serviceable while mobilizing sufficient soil strain to reduce compaction stresses, and to mobilize an active earth pressure coefficient

$$K_a = (1 - \sin\varphi'_{mob})/(1 + \sin\varphi'_{mob})$$

where φ'_{mob} is an angle of shearing resistance which can be mobilized at that permissible strain level.

The structural backfill should generally be of sufficient lateral extent to ensure that any lower quality soils, whether compacted fills of suitable material or natural soils, do not influence the behaviour of the structure. In particular, where firm to stiff clays of moderate or high plasticity are exposed in cuttings adjacent to a wall or are to be used as embankment fill, they should be curtailed sufficiently far from the structure. Such curtailment should be at a sufficiently small slope angle to avoid structural effects due to swelling when pore water suctions relax in the long term. A slope angle equal to the effective angle of shearing resistance of the clay may be taken to satisfy this requirement. When clays which may be subject to significant swelling are, for economic or other reasons, to be left steeper than this, a careful assessment must be made of the magnitude of the possible heave, and its influence on the structure.

4.6 Soil-Structure Interfaces

The effective angle of friction φ'_i between soil and concrete may be assumed to be equal to the critical state angle φ'_{crit} of the soil provided that the depth of surface texture of the concrete will exceed the median particle size of the soil. Otherwise the value should be taken as the smaller of (φ'_{crit} - 5°) and 30°. Alternatively the value may be taken from the ultimate strength of appropriate direct shear tests. The angle of friction between concrete and rock, especially when the surface of sliding coincides with a bedding plane, may likewise be smaller than the angle of friction against soils derived from the parent rock. Such surfaces should be tested in direct shear so that a residual angle of friction can conservatively be selected.

Structural interfaces against clays and clayey silts may be influenced by positive excess pore water pressures created within the soil during backfilling. Defensive measures to deal with this potential problem include drainage beneath the base, and the provision of a shear key to force the supporting soil to offer its undrained strength c_u in resistance to sliding.

The actual mobilisation of friction on any surface depends on relative movement. There is little opportunity for sliding against the active face of an abutment wall unless a plastic hinge in the wall stem is under consideration (Limit Mode 4). Likewise, friction will be developed on the vertical plane through the heel of a wall only when there is a tendency for the active wedge in that region to be distorted, such as when collapse is provoked by a relatively large superimposed load at, or beyond, the heel. It will always be safe, and generally be accurate, to ignore friction on vertical surfaces in the retained fill.

4.7 Drainage

Drainage measures will be provided which ensure that groundwater pressures on the stem will be reduced to the lowest practicable level. A drainage layer should preferably be provided beneath the backfill, unless it is itself sufficiently free-draining, so as to ensure that no pore pressures can develop therein.

A properly selected drainage blanket against the face of the wall will, when connected to an effective drainage outlet, prevent water pressures acting on the stem, but allowance must then be made for the possible build-up of groundwater within the backfill unless it is under-drained.

Consideration should be given to the relative costs and benefits of introducing drainage at a deeper level such that water pressures on the lower surface of the foundation would be eliminated, thereby enhancing the bearing capacity.

Factors which may reduce the effectiveness of drainage measures are:

(a) unexpected rate of flow due to ruptured water pipes
(b) clogging of gravel drainage media due to insufficient filtering of fines from adjacent soils
(c) clogging of fabrics which were intended to transmit water along their surface
(d) severence of pipe drains due to differential movements
(e) blocking or freezing of weepholes.

The earth pressures causing structural actions will be increased, and the soil bearing resistance significantly reduced, if groundwater elevations are underestimated.

All drains should therefore be designed and detailed to remain effective during the intended design life, unless the following conditions were each satisfied.

(i) Reduced performance could be monitored, or otherwise observed, prior to the occurrence of any collapse limit state.

(ii) The likely costs of any extra vigilance, maintenance or repair would not outweigh initial capital savings.

5 GLOSSARY

action that which affects equilibrium; including loads, pressures, imposed displacements and removal of support.

active soil state in which there is lateral spreading and a tendency of soil to support itself.

adaptive response strategy for avoiding limit states, in which observations during construction or operation may lead to the adoption of prepared alternative courses of action.

angle of shearing resistance, φ' the semi-angle subtended at the origin by a Mohr circle of effective stress, linked to some particular strain condition.

φ'_{max} maximum angle mobilizable for a given soil under specified conditions

φ'_{crit} ultimate angle mobilizable for a given soil at large strains; the fully softened strength.

φ'_{mob} angle mobilized at a particular working strain.

calculated response strategy for avoiding limit states by the use of calculations which aim to prove the capacity of the structure to withstand certain critical events.

collapse limit a state in which the structure or one of its principal components is on the verge of incalculably large displacements, threatening the safety of people.

critical event a set of severe circumstances which have been chosen to test the adequacy of the design when subject to a design situation involving a particular type of loading, and in respect of one particular limit mode of potential failure.

critical state an ultimate soil state in which unlimited shear strain can occur without any further change of stress or volume.

design situation definition of a scenario to be invoked in the evaluation of critical events, comprising a loading incident inflicted on a structure in a hazardous soil condition.

dilatancy rate of increase of volume with shear strain, leading directly to an enhancement of soil strength.

effective weight maximum vertical force delivered to the ground by a compaction machine, taking inertia into account.

elasticity material condition in which small stress changes produce recoverable strains.

equilibrium free body diagram representation of the complete set of external forces acting on a body, showing it to be in statical equilibrium.

evasive measures strategy for avoiding limit states by adopting some invulnerable detail,or by increased surveillance, for example.

limit mode a family of limit state mechanisms demonstrating one type of behaviour.

load combination a combination of load types for bridges defined in BS5400 Part 2.

load effect a structural stress-resultant, such as bending moment, shear force etc.

loading incident a test condition for bridge abutments comprising sub-sets of deck load combinations together with superimposed loads on the backfill.

lower bound a type of plastic collapse calculation in which stresses are nowhere permitted to exceed safe values, offering a safe or lower bound estimate of collapse loads .

mechanism an idealisation of the relative displacements which could disrupt the structure in some limit mode.

passive soil state in which there is lateral contraction and a tendency of soil to resist wall movement.

performance requirement a condition imposed by this document, requiring some demonstration of stability, rigidity or durability.

permissible strain a strain which may be mobilized without endangering performance requirements regarding serviceability.

plasticity material condition in which even small stress changes may produce significant irrecoverable strains.

precompression prior state of maximum effective stress establishing a yield condition within which the soil behaves elastically.

safe state a state of stress in which it is known that collapse can not occur.

serviceability limit a state in which the structure or one of its principal components is excessively distorted, making the structure unfit for use without significant repairs.

soil condition definition of soil conditions around an abutment wall to be assumed for the purposes of design calculations.

trial evaluation of the consequences of a particular loading incident with a particular soil condition in the possible activation of a particular limit mode .

upper bound a type of plastic collapse calculation in which particular collapse mechanisms are checked, offering an inherently unsafe or upper bound to the collapse load, mitigated only by a thorough search of possible mechanisms.

worst credible the most pessimistic rational interpretation.

yield the onset of plasticity.

6 BIBLIOGRAPHY

6.1 General Topics

Soil Mechanics

Bolton M D (1979) A guide to soil mechanics, Macmillan, London.
Lambe T W & Whitman R V (1969) Soil mechanics, John Wiley, New York.
Terzaghi K & Peck R B (1967) Soil mechanics in engineering practice, John Wiley, New York

Geotechnical Design

Bolton M.D. (1989) Geotechnical stress analysis for bridge abutment design, Transport and Road Research Laboratory Report.
Clayton C R I & Milititsky J (1986) Earth pressure and earth-retaining structures, Surrey Univ. Press.
Hambly E C (1979) Bridge foundations and sub-structures, BRE Report, HMSO, London.
Peck R B, Hanson W E and Thorburn T H (1974) Foundation engineering, John Wiley, New York.
Simons N E & Menzies B K (1975) A short course in Foundation Engineering, Newnes/Butterworth, London.
Winterkorn H F & Fang H-Y (1975) Foundation engineering handbook, van Nostrand Reinhold, New York.

Groundwater

Cedergren H R (1977) Seepage, drainage and flow nets, John Wiley, New York.

Soil Characterisation and Strength

Bolton M D (1986) The strength and dilatancy of sands, Geotechnique, Vol 36, No 1.
Geological Society of London (1986), Site Investigation Practice, Assessing BS 5930, Geological Society Engineering Geology Special Publication No. 2, Geological Society, London.
Wroth C P & Houlsby G T (1985) Soil Mechanics, property characterization and analysis procedures,11th Int Conf Soil Mech and Found Eng, San Francisco, Vol 1, 1-55.

6.2 Earth Pressure Calculations

Limiting Earth Pressures

Caquot A & Kerisel J (1948) Tables for the calculation of passive pressure, active pressure and bearing capacity of foundations, Gauthier-Villars, Paris.
Sokolovski V V (1960) Statics of soil media, Butterworth, London.

Superimposed Load Effects

Spangler M G & Mickle J L (1956) Lateral pressures on retaining walls due to backfill surface loads, Bull Highway Res Board, 141, 1-18.

Compaction Effects

Broms B B (1971) Lateral pressure due to compaction of cohesionless soils, Proc 4th Conf Soil Mech , Budapest, 373-384.
Duncan J M & Seed R B (1986) Compaction induced earth pressures under K_0 conditions, Jnl Geot Eng Div, ASCE, Vol 112, No 1, 1-22.
Ingold T S (1979) The effects of compaction on retaining walls, Geotechnique, 29, No 3, 265-283.
Seed R B & Duncan J M (1986) F E analyses: compaction-induced stresses and deformations, Jnl Geot Eng Div, ASCE, Vol 112, No1, 23-43.

6.3 Foundation Calculations

Limiting Bearing Pressures

Brinch Hansen J (1970) A revised and extended formula for bearing capacity, Bulletin No28, Danish Geo Inst, Copenhagen, 5-11.
De Beer E E (1970) Experimental determination of the shape factors and the bearing capacity factors of sand,Geotechnique, Vol 20, No4, 387-411.
Meyerhof G G (1953) The bearing capacity of foundations under eccentric and inclined loads , 3rd Int Conf Soil Mech and Found Eng, Zurich, Vol 1, 440-445.
Skempton A W (1951) The bearing capacity of clays, Proc Building Research Congress, London, 180-189.

Settlement Calculations

Burland J B & Wroth C P (1974) Settlement of buildings and associated damage, Proc Conf on Settlement of Structures, Cambridge, Pentech Press London.
Federal Highway Administration (1987) Spread footings for highway bridges, FHWA Report RD-86/185, U.S.A.
Poulos H G & Davis E H (1974) Elastic solutions for soil and rock mechanics, John Wiley, New York.
Skempton A W & Bjerrum L (1957) A contribution to the settlement analysis of foundations on clay, Geotechnique Vol 7, No 3, 168-178.

Soil Stiffness

Burland J B & Hancock R J R (1977) Underground car park at the House of Commons, London : geotechnical aspects, The Structural Engineer, Vol 55, No 2, 87-100.
Jardine R J, Fowie A, Maswoswe J & Burland J B (1985) Field and laboratory measurements of soil stiffness , 11th Int Conf Soil Mech and Found Eng, San Francisco, V2, 511-514.
Iwasaki T, Tatsuoka F & Yoshikazu T (1978) Shear moduli of sands under cyclic torsional shear loading, Soils and Foundation, Tokyo, Vol 18, No 1, 39-56.
Hardin B O & Drnevich V P (1972) Shear modulus and damping in soils: design equations and curves , Soil Mech and Found Div, ASCE, Vol 98, No SM 7, 667-692.

6.4 Structural Calculations

Structural Analysis

Pucher A (1973) Influence surfaces of elastic plates (In German: Einflussfelder elastischer platten), Springer-Verlag, Vienna & New York.

Roark R J & Young W C (1976) Formulas for stress and strain, McGraw-Hill, London.

Finite Element Analysis

Britto A M & Gunn M J (1987) Critical state soil mechanics via finite elements, Ellis Horwood (John Wiley).

Naylor D J, Pande G N, Simpson B & Tabb R (1981) Finite elements in geotechnical engineering, Pineridge Press, Swansea.

6.5 Design Information

Performance of Bridge Abutments

Federal Highway Administration (1982) Performance of highway bridge abutments on spread footings, FHWA Report RD-81/184, U.S.A.

Federal Highway Administration (1982) Tolerable movement criteria for highway bridges, FHWA Report RD-85/107, U.S.A.

British Standards and Codes of Practice (BSI, London)

BS 1377 (1975) Methods of test for soils for Civil Engineering purposes.

BS 5400 (1978) Steel, concrete and composite bridges.

BS 5930 (1981) Code of Practice for Site Investigations.

BS 6349 (1984) Code of Practice for Maritime Structures , Part 1, General Criteria.

Other Standards and Specifications

BS Code of Practice No 2 (1951) Earth Retaining Structures, Institution of Structural Engineers, London.

Dept of Transport Specification for Road and Bridge Works (1987) HMSO.

7. ACKNOWLEDGEMENTS

The work described in this report forms part of the research programme of the Structural Analysis Unit (Head, Dr R T Murray) and Ground Engineering Division Head, Dr J Temporal) of the Structures Group of TRRL.

Figure 1 Typical abutment wall cross-sections

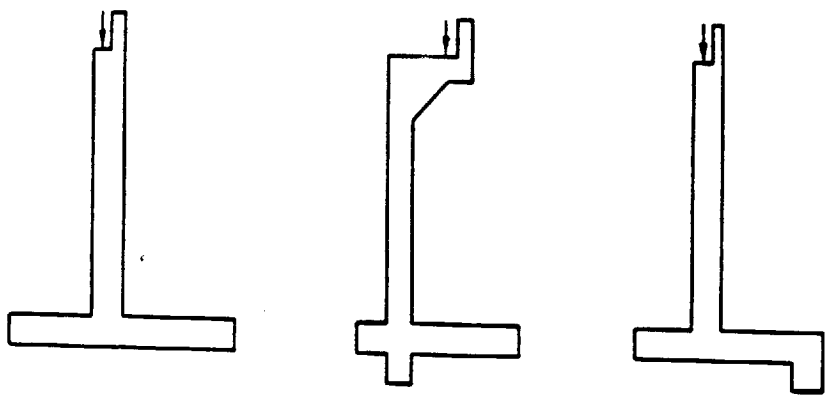

Figure 2 Wing wall arrangements

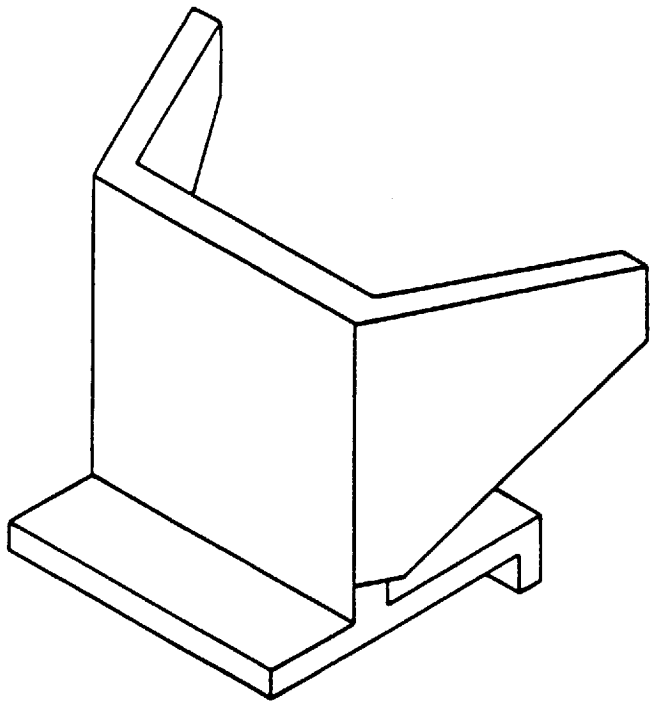

(a) lateral cantilevers

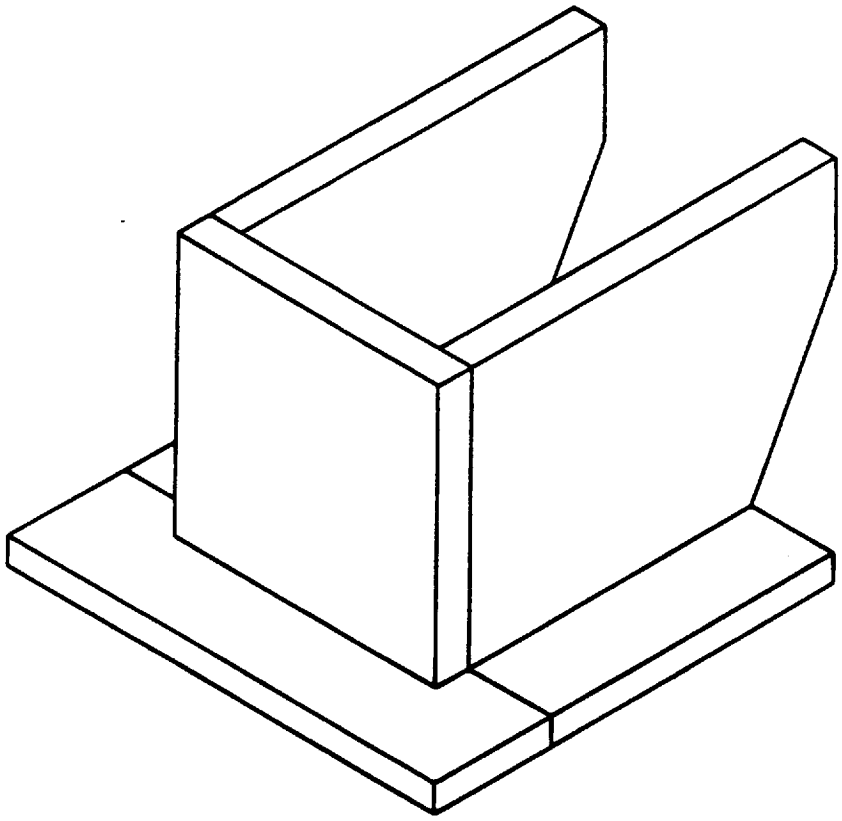

(b) vertical cantilevers

Figure 3 Limit mode 1: unserviceability arising through soil strain

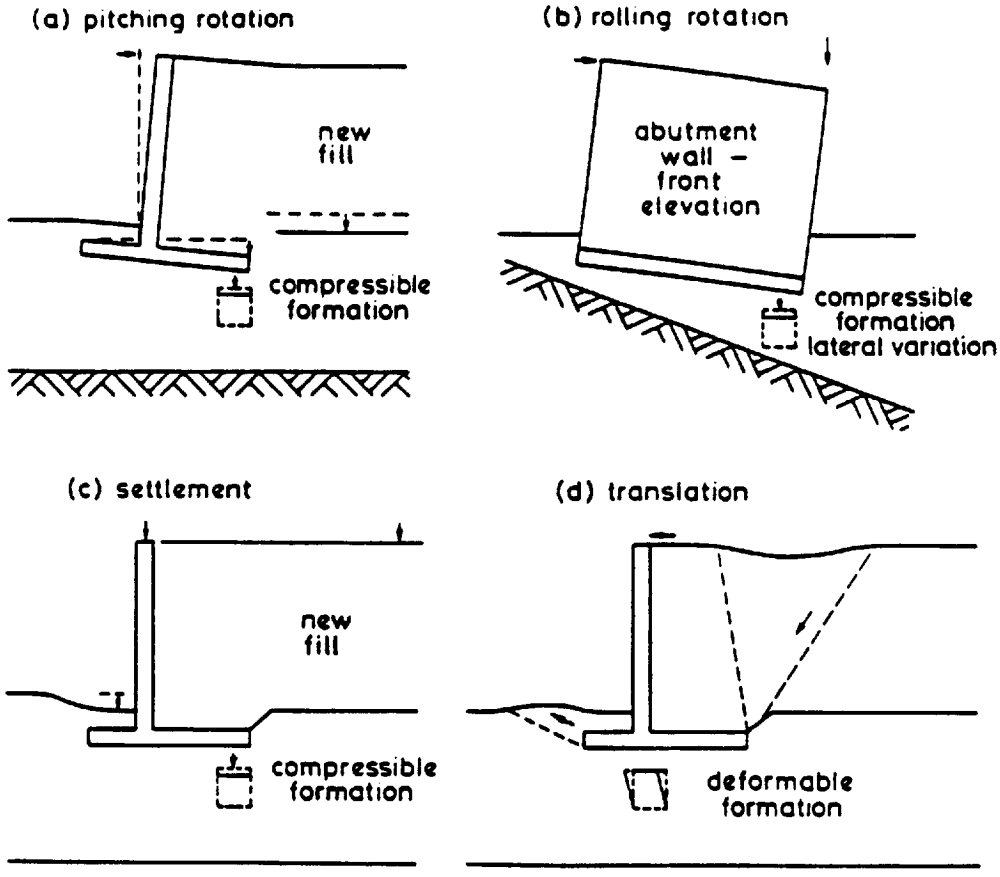

Figure 4 Compaction of loose backfill in service

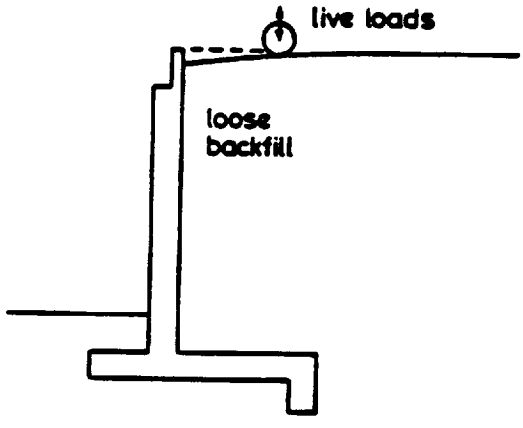

Figure 5 Limit mode 3: collapse arising through soil failure

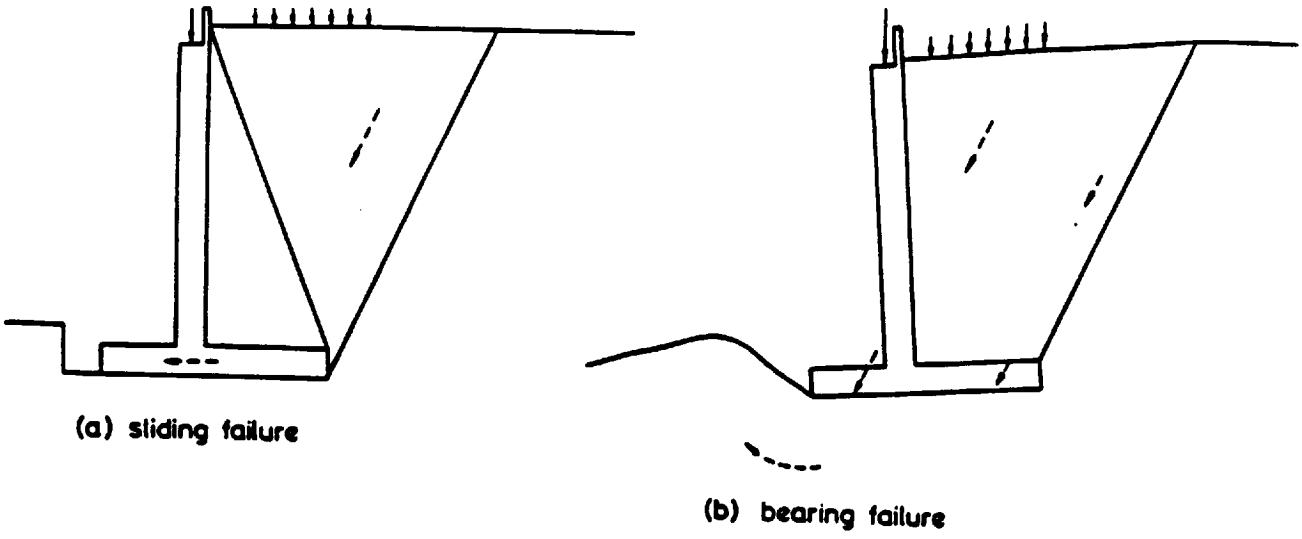

Figure 6 Limit mode 4: collapse arising through concrete failure

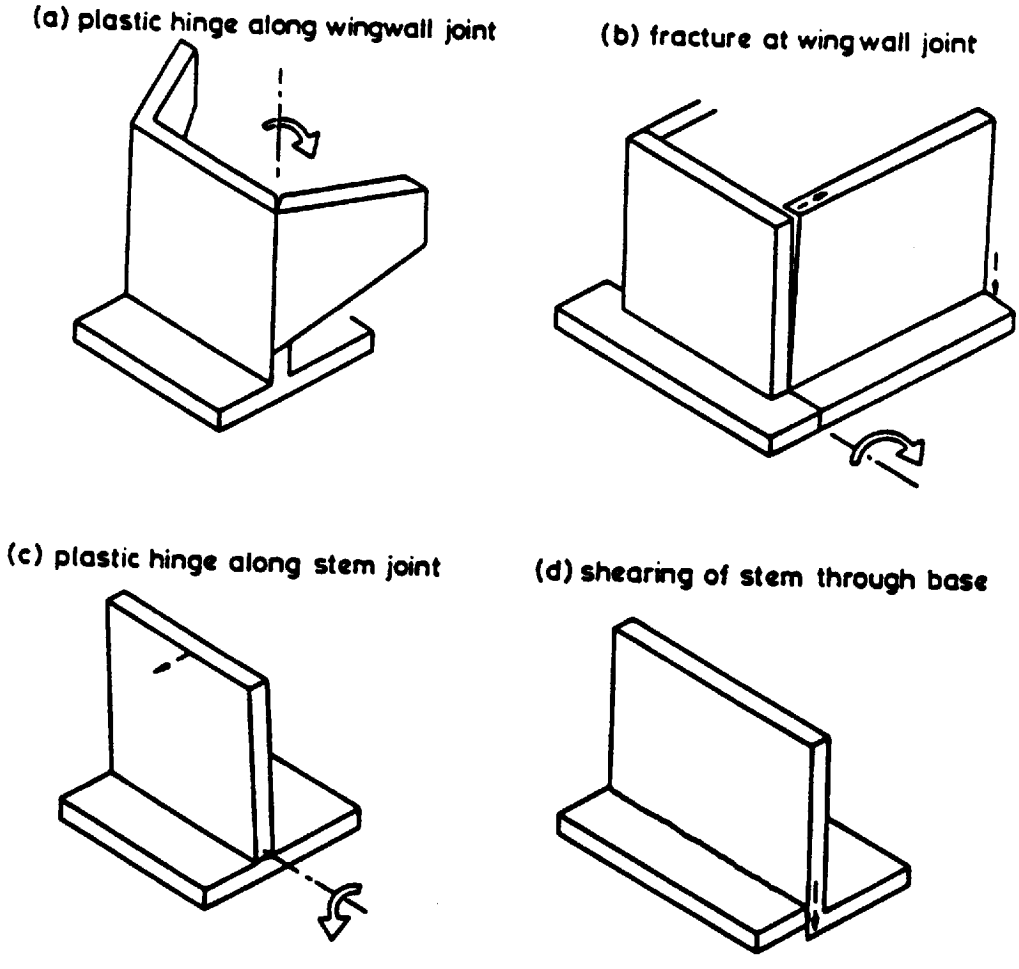

Figure 7 Positioning HA loading for maximum effect

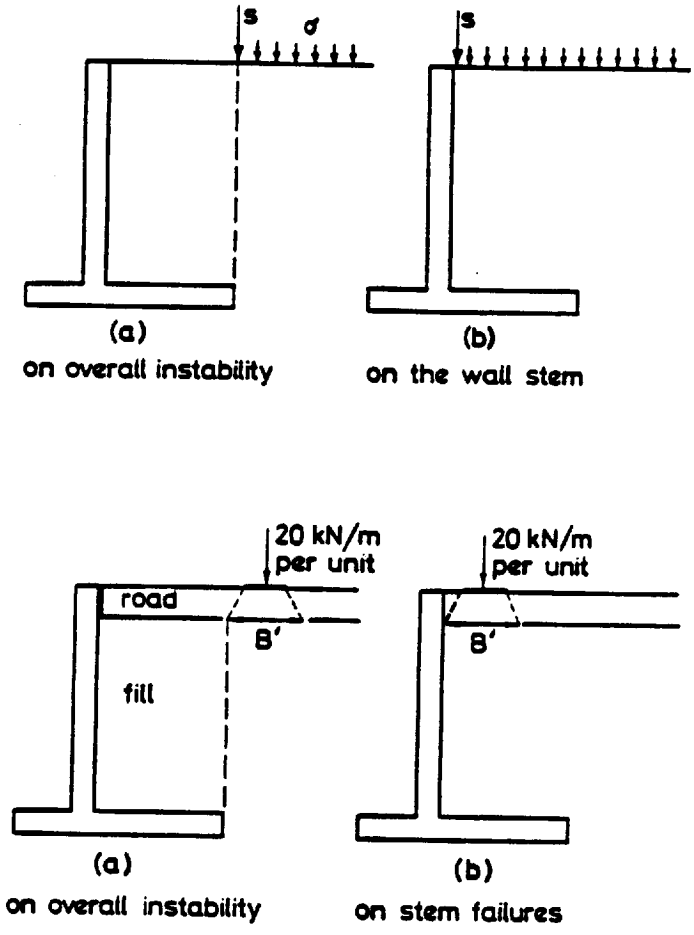

Figure 8 Positioning HB loading for maximum effect