Tall Buildings
Extension Worksheet

Since there are so many unusual shapes and angles in the Burj al Arab, this worksheet will look at the building in more detail.
The height of this building is known to be 321 m to the spire, and 210 m to the roof.
The side profile can be drawn as:

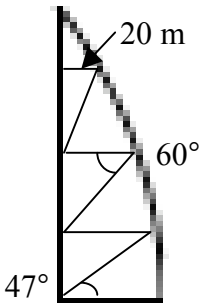

1. If the sections from bottom to top are assumed to be 1/4, 1/3, 1/3 and 1/12 of the total height respectively then calculate the lengths of all the bracing members except the curved outer one.

2. Now find the area of the side of the building which is shaded on the diagram below. Remember the height of the building is 321 m. Give your answer to 3 s.f.

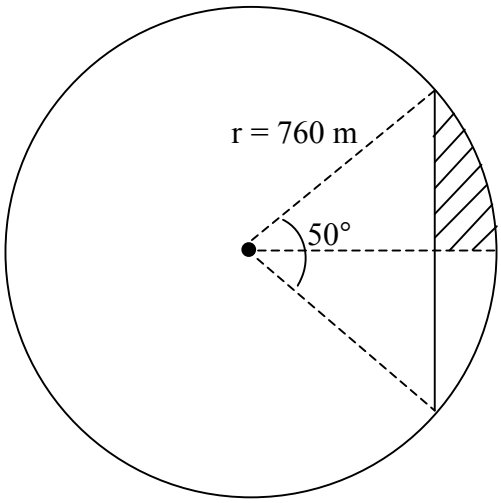

3. The helicopter landing-pad at the top of the hotel is circular and looks like the picture below in plan view.

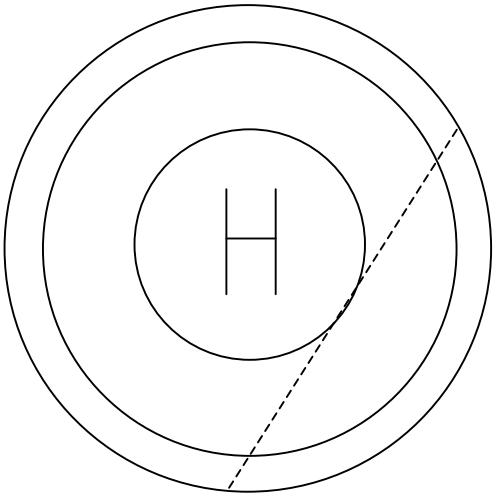

Some maintenance work is being carried out on part of the heli-pad. A barrier needs to be put up along the dashed line in the picture above. The radius of the inner circle is 5 m and the diameter of the outer circle is 26 m. Find the length of the barrier.
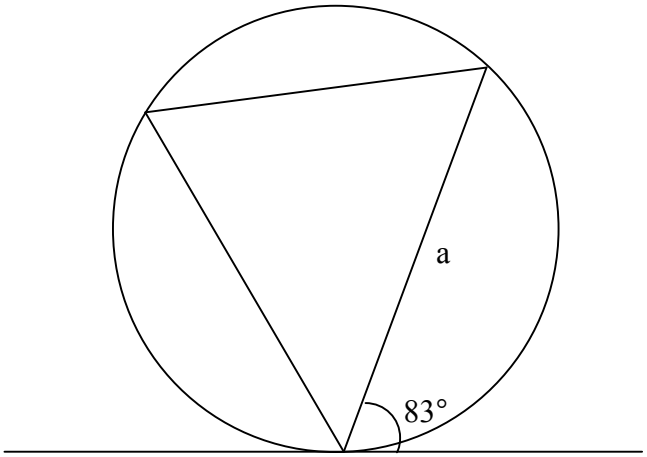
4. Some tarmac needs replacing on the heli-pad. The area lies outside the triangle shape. Using your answer for question 3 as the value of ‘a’ and the diameter as 26 m, find the area that needs repair.