Tall Buildings
Teacher's Notes

Aims

This pack is aimed at reinforcing National Curriculum material at KS4 in Mathematics in an enjoyable, applied way. It is aimed at students who may potentially go on to study A-Level Mathematics and has been designed with 1 hour lessons in mind. Additional material is included for able students as well as suggestions for coping with weaker students.

Curriculum content

This lesson requires the use of:

- Circle theorems
- Sine and cosine rule
- Geometry skills

Key skills:

- Visual recognition of shapes/applications of theory
- Problem solving
- Communication

Methods covered are:

- Shapes and their properties
- Circle theorems
- Areas
- Sine and cosine rule
- Alternate, corresponding, opposite angles
- Angles in triangles and straight lines = 180°
- Circumference and area of circles

Preparation

Photocopy worksheets for students.

Worksheet 1: Leading on from the starter, using sine rule and alternate angles
Worksheet 2: Focusing on the Burj al Arab building and using circle theorems
Worksheet 3: Extension work, building on the topics covered in the lesson

Equipment required

PowerPoint presentation
Worksheets

Timing targets

This pack is designed for a 1 hour lesson, although it contains extension material. A model lesson is outlined below to give timing guidelines:

Start	5 mins	
Starter: Geometry	10 mins	PowerPoint presentation
Activity 1 calculations	20 mins	Worksheet 1
Introduction of Burj al Arab: Circle theorems	5 mins	PowerPoint presentation
Activity 2 calculations	20 mins	Worksheet 2
Wrap up	5 mins	Comments on accuracy and application of Maths

Worksheet 3 – Extension work

Guidance

- The calculations have been done assuming that the students have not yet covered trigonometry. However, if they are familiar with trigonometry it will mean they can tackle the problems faster, rather than using the sine rule.

Points to emphasise:

- The dimensions used in the Burj al Arab calculations are estimates.
- Engineering is about the application of theory to the real world.
- Maths is applied and used in everyday situations, and if applied properly is very rewarding.
- Some problems have been simplified since otherwise they would have to be solved using more complex techniques.

Mixed abilities:

- Some of the problems need setting up by the student. Weaker students may need some help starting off these problems.
- The extension worksheet can be used in class if some students have completed Activity 2 and are able to tackle some more complex problems. Alternatively it can be used for homework.

Presentation notes

This presentation should be given in two parts. The first part is aimed as a re-cap of basic knowledge of shapes, properties and the various methods available for calculating angles and lengths. The questions included in the slides can either be done individually or as an oral whole class activity. The second part of the presentation introduces the building Burj al Arab which is an amazing feat of Engineering. It is aimed to capture the students' attention and make them enthusiastic about completing questions related to the geometry of the building.

Slide 3

There are many types of crane. For example: tower crane, hammerhead crane, mobile crane and telescopic crane.

Slide 10 - 13

The Burj al Arab has 28 double-storey floors. It was deigned by Tom Wright and was completed in 1999. It is said that the hotel contains about 8000 m^2 of 22-carat gold leaf and rooms cost over $1000 per night.

Answers

Worksheet 1: Activity 1

1. x_1 = 100°, x_2 = 30°, L_1 = 10 m, L_2 = 5 m

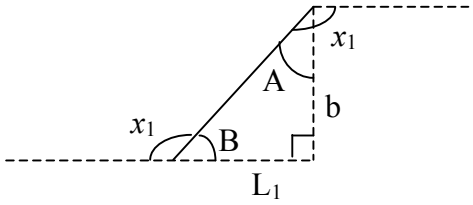

Alternate angle: A = x_1 – 90°
= 100° – 90° = 10°

Angles on a straight line: B = 180° – x_1
= 180° – 100° = 80°

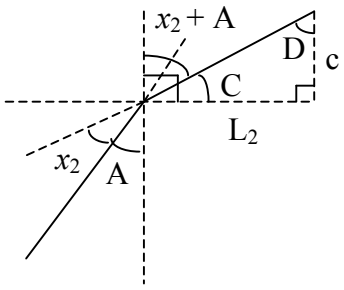

Sine rule to find b:

$$b = \frac{\sin B}{\sin A} \times L_1 = \frac{\sin 80}{\sin 10} \times 10 = 56.7 \text{ m}$$

Opposite angles: C = 90° – x_2 – A
= 90° – 30° – 10° = 50°

Angles in a triangle: D = 180° – 90° – C
= 180° – 90° – 50° = 40°

Sine rule to find c:

$$c = \frac{\sin C}{\sin D} \times L_2 = \frac{\sin 50}{\sin 40} \times 5 = 6.0 \text{ m}$$

Height of building = b + c
= 56.7 + 6.0 = **62.7 m**

2. Find lengths of crane arms:

Pythagoras' theorem: crane $arm_1 = \sqrt{(L_1^2 + b^2)}$
$= \sqrt{(10^2 + 56.7^2)}$
= 57.6 m

crane $arm_2 = \sqrt{(L_2^2 + c^2)}$
$= \sqrt{(5^2 + 6.0^2)}$
= 7.8 m

a. x_1 = 95°, x_2 = 30°, Crane arm_1 = 57.6 m, Crane arm_2 = 7.8 m

As before:

A = x_1 – 90°
= 95° – 90° = 5°

B = 180° – x_1
= 180° – 95° = 85°

$$b = \frac{\sin B}{\sin 90} \times \text{crane arm}_1 = \frac{\sin 85}{\sin 90} \times 57.6 = 57.4 \text{ m}$$

$C = 90° - x_2 - A$
$= 90° - 30° - 5° = 55°$

$c = \frac{\sin C}{\sin 90} \times \text{crane arm}_2 = \frac{\sin 55}{\sin 90} \times 7.8 = 6.4 \text{ m}$

Height of building = b + c
= 57.4 + 6.4 = **63.8 m**

b. $x_1 = 105°$, $x_2 = 30°$, Crane arm$_1$ = 57.6 m, Crane arm$_2$ = 7.8 m

As before:
$A = x_1 - 90°$
$= 105° - 90° = 15°$

$B = 180° - x_1$
$= 180° - 105° = 75°$

$b = \frac{\sin B}{\sin 90} \times \text{crane arm}_1 = \frac{\sin 75}{\sin 90} \times 57.6 = 55.6 \text{ m}$

$C = 90° - x_2 - A$
$= 90° - 30° - 15° = 45°$

$c = \frac{\sin C}{\sin 90} \times \text{crane arm}_2 = \frac{\sin 45}{\sin 90} \times 7.8 = 5.5 \text{ m}$

Height of building = b + c
= 55.6 + 5.5 = **61.1 m**

c. The dimensions and set up of the crane clearly have an impact on the height of the building; in this case varying the angle of the main arm by only 5° changes the height of the building by more than a metre. With the combined movement of both crane arms the angles and dimensions would have a larger impact than just varying one angle.

Worksheet 2: Activity 2

1. Radius = 40 m

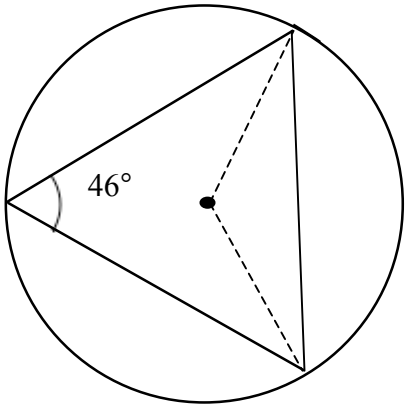

Circle theorem: 2 x 46° = central angle = 92°
And angles in a triangle (180° - 92°)/2 = 44°
Sides = radius = 40 m

Cosine rule: Long side = $\sqrt{(40^2 + 40^2 – 2x40x40xCos92)}$ = 57.5 m

Area of triangle = ½ x base x height

Height of small triangle (Pythagoras) = $\sqrt{(40^2 – (57.5/2)^2)}$ = 27.8 m

So, area of triangle = ½ x 57.5 x (27.8 + 40)
= 1950 m

2. Radius = 40 m

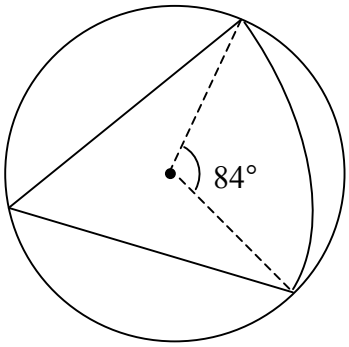

Circle theorem: angle of wedge = 84° / 2 = 42°
Circumference of circle = $2\pi r$
This segment is only 42° of the circle: 2π x 40 x 42/360
= 29 m

Worksheet 3: Extension work

1.

Total height = 321 m

Sections are: 1/4, 1/3, 1/3 and 1/12 of total height

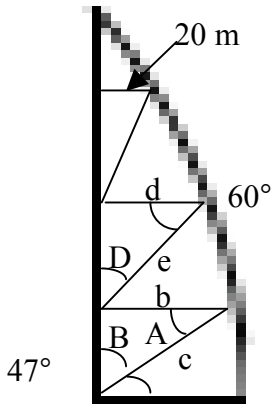

Alternate angles gives A = 47°

Angles in a triangle: B = 180° - 90° - 47° = 43°

Height: ¼ x 321 = 80.3 m

b = $\frac{80.3}{\sin 47}$ x sin 43 = **74.9 m**

c = $\sqrt{(74.9^2 + 80.3^2)}$ = **109.8 m**

Alternate angles gives D = 90° - 60° = 30°

Height: 1/3 x 321 = 107 m

d = $\frac{107}{\sin 60}$ x sin 30 = **61.8 m**

e = $\sqrt{(61.8^2 + 107^2)}$ = **123.6 m**

Height: 1/3 x 321 = 107 m

Top bracing member = **20 m**

Diagonal member = $\sqrt{(20^2 + 107^2)}$ = **108.8 m**

2. Area of segment of circle = πr^2 x 50/360

= π x 760^2 x 50 / 360

= 252026 m^2

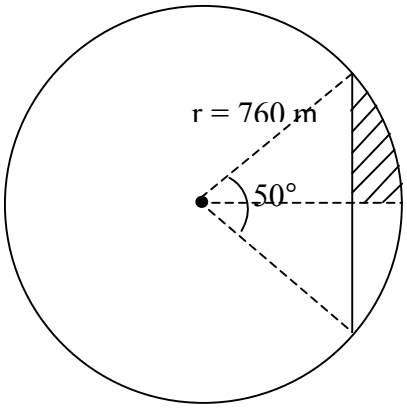

Angles in triangle: 180° - 90° - (50°/2) = 65°

Height of triangle: $\frac{760}{\text{Sin } 90}$ x sin 65 = 688.8 m

Other side of small triangle: $\sqrt{(760^2 – 688.8^2)}$ =321.2 m

Area of triangle: ½ x base x height

= ½ x (2 x 321.2) x 688.8

= 221242.6 m^2

Area of building side x 2 = 252026 – 221242.6

Area of building side = **15391.7 m^2**

3. Radius of inner circle = 5 m

Diameter of outer circle = 26 m so radius = 13 m

Construct a right-angled triangle with the radii of the circles:

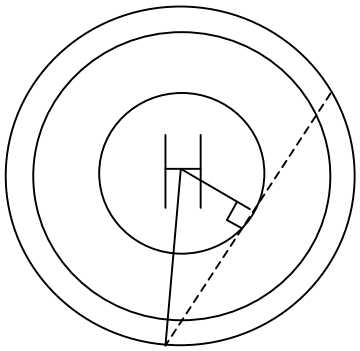

Use Pythagoras to calculate half the chord length:

$\sqrt{(13^2 – 5^2)}$ = 12 m

Therefore, the length of the chord = 12 x 2 = **24 m**

4. From question 3, a = 24 m and r = 13 m
   Using the tangent circle theorems: A = 83°
   Using the tangent circle theorems: B = 72°
   If we use a as the base of the triangle we need the height:

   $$b = \frac{a}{\sin A} \times \sin B = \frac{24}{\sin 83} \times \sin 72 = 23 \text{ m}$$

   Angles on a straight line:

   C = 180° - 83° - 72° = 25°

   $$\text{Height} = \frac{b}{\text{Sin } 90} \times \sin C = 9.7 \text{ m}$$

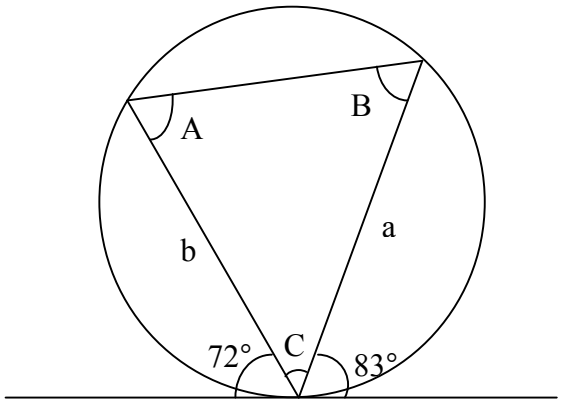

Area of triangle = ½ x base x height = ½ x 24 x 9.7 = 116.4 m^2
Area of circle = $\pi r^2 = \pi \times 13^2 = 530.9$ m^2

Area for repair = 530.9 – 116.4 = **414.5 m^2**